PW Resistance – Welding Application

Application Challenge: PW Resistance Products Ltd has been designing and making high quality spot welders for more than 40 years. The weld gun in this application connects cells in batteries and requires precise positioning. PW Resistance wanted the benefit of servo control but also wanted to use the motor of their choice. The Exlar I Series allows you that kind of flexibility -- select from nearly any manufacturers' motor to mount to the actuator.

The I Series servo-controlled actuators use roller screw technology which allows you to drive to a particular force and accurately set the proper position for welding. Servo control flexibility allows you to manipulate position and speed without setting any switches or changing the offsets, and without the need and expense of load cells.

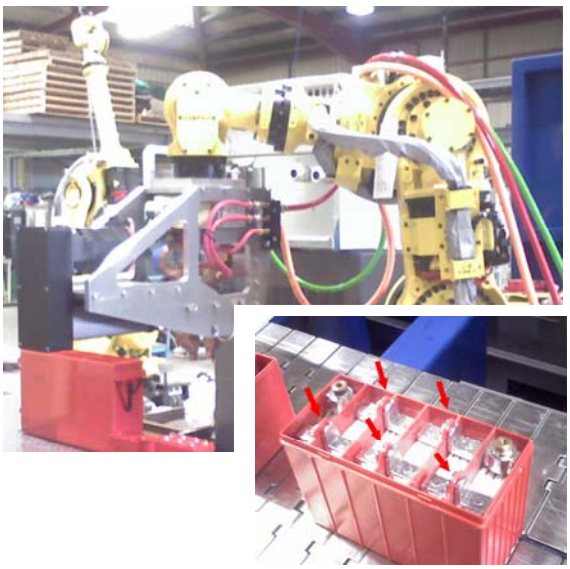

Exlar Solution: With Exlar's all electric actuators, PW Resistance achieved the desired results -- servo control for accuracy and repeatability, choice of motor flexibility, precise positioning, and overall long life.

Exlar Products: I Series actuator (IM40, 12 inch stroke)

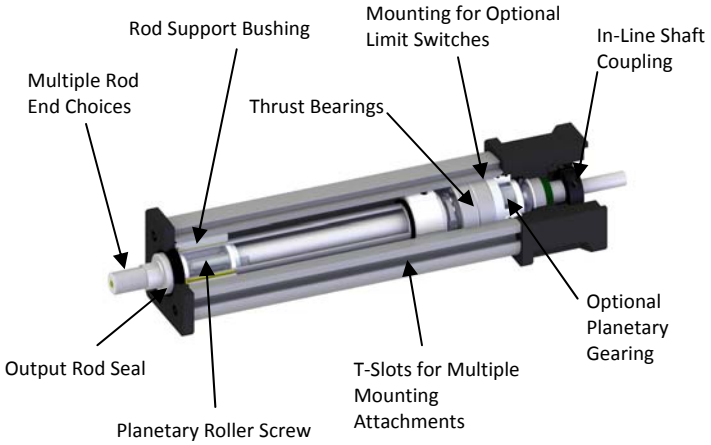

The Exlar Linear Actuator Advantage with Planetary Roller Screw Technology

- Millions of weld cycles without re-lubrication or maintenance
- Roller screws offer 15 times longer life than ball screw actuator
- Less noise than other motion technologies
- Less energy consumption with electric actuation
- Accurate and repeatable positioning
- Wide variety of mounting styles
- High cycle rates
- Multiple stroke lengths

Optimize your application with Exlar actuators. Visit www.exlar.com for complete product information or call us at 952-368-3434. You may also email us at info@exlar.com.

Exlar Corporation
www.exlar.com
952-368-3434
PN 40955 4-2009